myprojectorlamps.com

The most trusted, dependable name in projector lamp sales.

http://www.myprojectorlamps.com

http://www.myprojectorlamps.ca

http://www.myprojectorlamps.eu

The following projector manual has not been modified or altered in any way.

ViewSonic®

PJ450D/PJ452D/PJ455D
DLP Projector

- User Guide
- 使用手冊
- 使用手册

Compliance Information

For U.S.A.

This equipment has been tested and found to comply with the limits for a Class B digital device, pursuant to part 15 of the FCC Rules. These limits are designed to provide reasonable protection against harmful interference in a residential installation. This equipment generates, uses, and can radiate radio frequency energy, and if not installed and used in accordance with the instructions, may cause harmful interference to radio communications. However, there is no guarantee that interference will not occur in a particular installation. If this equipment does cause harmful interference to radio or television reception, which can be determined by turning the equipment off and on, the user is encouraged to try to correct the interference by one or more of the following measures:

- Reorient of relocate the receiving antenna.
- Increase the separation between the equipment and receiver.
- Connect the equipment into an outlet on a circuit different from that to which the receiver is connected.
- Consult the dealer or an experienced radio/TV technician for help.

Compliance Information for Canada

Notice: This class B digital apparatus complies with Canada ICES-003.

AVIS: Cet appeil numerique de la Classe B conforme a la norme NMB-003 du Canada.

Compliance Information for European Countries

CE Conformity

CE

The device complies with the requirements of the EEC directive 89/336/EEC as amended by 92/31/EEC and 93/68/EEC Art. 5 with regard to “Electromagnetic compatibility,” and 73/23/EEC as amended by 93/68/EEC Art. 13 with regard to “Safety.”

User Information for all Countries

Notice: Use the cables which are included with the projector or specified.

Important Safety Instructions

1 Read these instructions.

2 Keep these instructions.

3 Heed all warnings.

4 Follow all instructions.

5 Do not use this unit near water.

6 Clean only with dry cloth.

7 Do not block any ventilation openings. Install in accordance with the manufacturer's instructions.

8 Do not install near any heat sources such as radiators, heat registers, stoves, or other devices (including amplifiers) that produce heat.

9 Do not defeat the safety purpose of the polarized or grounding-type plug. A polarized plug has two blades with one wider than the other. A grounding type plug has two blades and a third grounding prong. The wide blade or the third prong are provided for your safety. If the provided plug does not fit into your outlet, consult an electrician for replacement of the obsolete outlet.

10 Protect the power cord from being walked on or pinched particularly at plugs. convenience receptacles and the point where they exit from the unit. Be sure that the power outlet is located near the unit so that it is easily accessible.

11 Only use attachments/accessories specified by the manufacturer.

12 Use only with the cart, stand, tripod, bracket, or table specified by the manufacturer, or sold with the unit. When a cart is used, use caution when moving the cart/unit combination to avoid injury from tip-over

13 Unplug this unit when unused for long periods of time.

14 Refer all servicing to qualified service personnel. Servicing is required when the unit has been damaged in any way, such as power-supply cord or plug is damaged, liquid has been spilled or objects have fallen into the unit, the unit has been exposed to rain or moisture, does not operate normally, or has been dropped.

Copyright © ViewSonic Corporation, 2004. All rights reserved.

Apple, Mac and ADB registered trademarks of Apple Computer, Inc.

Microsoft, Windows, Windows NT, and the Windows logo are registered trademarks of Microsoft Corporation in the United States and other countries.

ViewSonic, the three birds logo and OnView are registered trademarks of ViewSonic Corporation.

VESA and SVGA are registered trademarks of the Video Electronics Standards Association.

DPMS and DDC are trademarks of VESA.

PS/2, VGA and XGA are registered trademarks of International Business Machines Corporation.

Disclaimer: ViewSonic Corporation shall not be liable for technical or editorial errors or omissions contained herein; nor for incidental or consequential damages resulting from furnishing this material, or the performance or use of this product.

In the interest of continuing product improvement, ViewSonic Corporation reserves the right to change product specifications without notice. Information in this document may change without notice.

No part of this document may be copied, reproduced, or transmitted by any means, for any purpose without prior written permission from ViewSonic Corporation.

Electronic Warranty Registration

To meet your future needs, and to receive any additional product information as it becomes available, please register your projector's warranty on the Internet at: http://www.viewsonic.com

For Your Records

Product Name:	PJ450D/PJ452D/PJ455D ViewSonic DLP Projector
Model Number:	VS10732
Document Number:	PJ450D/PJ452D/PJ455D-1_UG_ENG Rev. 1A 12-24-04
Serial Number:	_____
Purchase Date:	_____

Symbols Used

Warning symbols are used on the unit and in this manual to alert you of hazardous situations.

The following boxes are used in this manual to alert you to important information.

> ***Note:***
> *Provides additional information on the topic at hand.*

> ***Important:***
> *Provides additional information that should not be overlooked.*

> ***Caution:***
> *Alerts you to situations that may damage the unit.*

> ***Warning:***
> *Alerts you to situations that may damage the unit, create a hazardous environment, or cause personal injury.*

Throughout this manual, component parts and items in the OSD menus are denoted in bold font as in this example:
"Push the **Menu** button on the remote control to open the **Main** menu."

Main Features

- *Lightweight unit, easy to pack away and transport*
- *Compatible with all major video standards including NTSC, PAL, and SECAM*
- *A high brightness rating allows for presentations in daylight or in lit rooms*
- *Supports resolutions up to SXGA at 16.7 million colors to deliver crisp, clear images*
- *Flexible setup allows for front rear and ceiling projection*
- *Line-of-vision projections remain square, with advanced keystone correction for angled projections*
- *Input source automatically detected*

Remote Control

The remote control has a laser for pointing out items on a screen.
DANGER: Do not point the laser in the eyes. Doing so can damage the eyes permanently.

General Safety Information

- Do not open the unit case. Aside from the projection lamp, there are no user-serviceable parts in the unit. For servicing, contact qualified service personnel.
- Follow all warnings and cautions in this manual and on the unit case.
- The projection lamp is extremely bright by design. To avoid damage to eyes, do not look into the lens when the lamp is on.
- Do not place the unit on an unstable surface, cart, or stand.
- Avoid using the system near water, in direct sunlight, or near a heating device.
- Do not place heavy objects such as books or bags on the unit.

Power Safety

- Only use the supplied power cord.
- Do not place anything on the power cord. Place the power cord where it will not be in the way of foot traffic.
- Remove the batteries from the remote control when storing or not in use for a prolonged period.

Replacing the Lamp

- Replacing the lamp can be hazardous if done incorrectly. Refer to “Replacing the Projection Lamp” on page 26 for clear and safe instructions for this procedure.
- Unplug the power cord.
- Allow the lamp sufficient time to cool.

Cleaning the Projector

- Unplug the power cord before cleaning. Refer to “Cleaning the Projector” on page 28.
- Allow the lamp sufficient time to cool.

About this manual

This manual is intended for end users and describes how to install and operate the DLP projector. Wherever possible, relevant information—such as an illustration and its description—has been kept on one page. This printer-friendly format is both for your convenience and to help save paper and thereby protect the environment. It is suggested that you only print sections that are relevant to your needs.

Table of contents

GETTING STARTED 1

PACKING CHECKLIST 1

VIEWS OF PROJECTOR PARTS 2

Front-left view 2

Top view—OSD buttons and LEDs 3

Rear view—connectors 5

Bottom view 7

REMOTE CONTROL PARTS 8

REMOTE CONTROL OPERATING RANGE 9

PROJECTOR AND REMOTE CONTROL BUTTONS 10

SETUP AND OPERATION 11

INSERTING THE REMOTE CONTROL BATTERIES 11

CONNECTING INPUT DEVICES 12

STARTING AND SHUTTING DOWN THE PROJECTOR 13

ADJUST THE ZOOM, FOCUS AND KEYSTONE 15

ADJUSTING THE VOLUME 16

ON-SCREEN DISPLAY MENU SETTINGS 17

ON-SCREEN DISPLAY MENU CONTROLS 17

Navigating the OSD 17

Setting the OSD Language 18

Main Menu 19

Setup Menu 21

Config Menu 22

Utility Menu 23

Language Menu 24

Status Menu 25

MAINTENANCE AND SECURITY 26

REPLACING THE PROJECTION LAMP 26

Resetting the Lamp 27

CLEANING THE PROJECTOR 28

Cleaning the Lens 28

Cleaning the Case 29

USING THE KENSINGTON LOCK 29

TROUBLESHOOTING 30

COMMON PROBLEMS AND SOLUTIONS 30

TIPS FOR TROUBLESHOOTING 30

LED ERROR MESSAGES 31

IMAGE PROBLEMS 31

LAMP PROBLEMS 32

REMOTE CONTROL PROBLEMS 32

AUDIO PROBLEMS 32

HAVING THE PROJECTOR SERVICED 33

SPECIFICATIONS 34

SPECIFICATIONS 34

Input/output connectors 35

PROJECTION DISTANCE VERSUS PROJECTION SIZE 36

TIMING MODE TABLE 37

DIMENSIONS 38

Packing Checklist

Carefully unpack the projector and check that the following items are included:

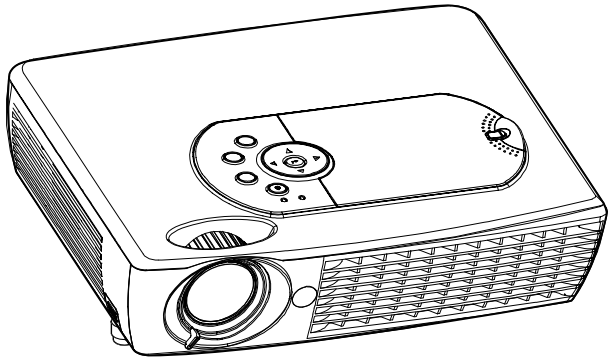

DLP PROJECTOR WITH LENS CAP

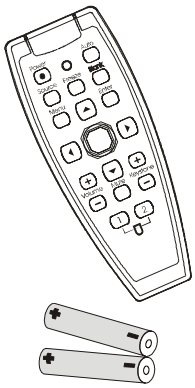

REMOTE CONTROL (WITH TWO AAA BATTERIES)

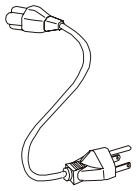

250V POWER CABLE

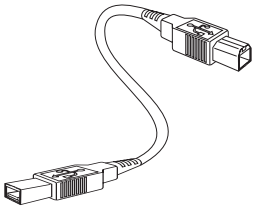

USB CABLE

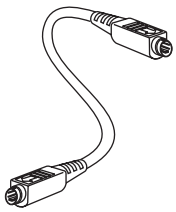

S-VIDEO CABLE

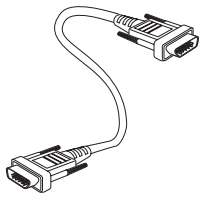

COMPUTER CABLE (DVI-DB15)

WIZARD CD (USER GUIDE)

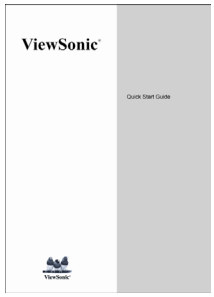

MULTI-LANGUAGE QUICK START GUIDE

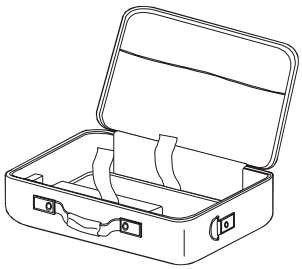

CARRYING CASE

Contact your dealer immediately if any items are missing, appear damaged, or if the unit does not work.

Caution:

1. *Avoid using the projector in dusty environments.*
2. *Leave the power cable plugged in (for 5-10 minutes) until the projector returns to room temperature before placing the projector inside the soft case. Placing the projector into the case soon after switching off the power could cause the projector to break down. Be sure to attach the lens cap and place the projector into the soft case.*

Views of Projector Parts

Front-left view

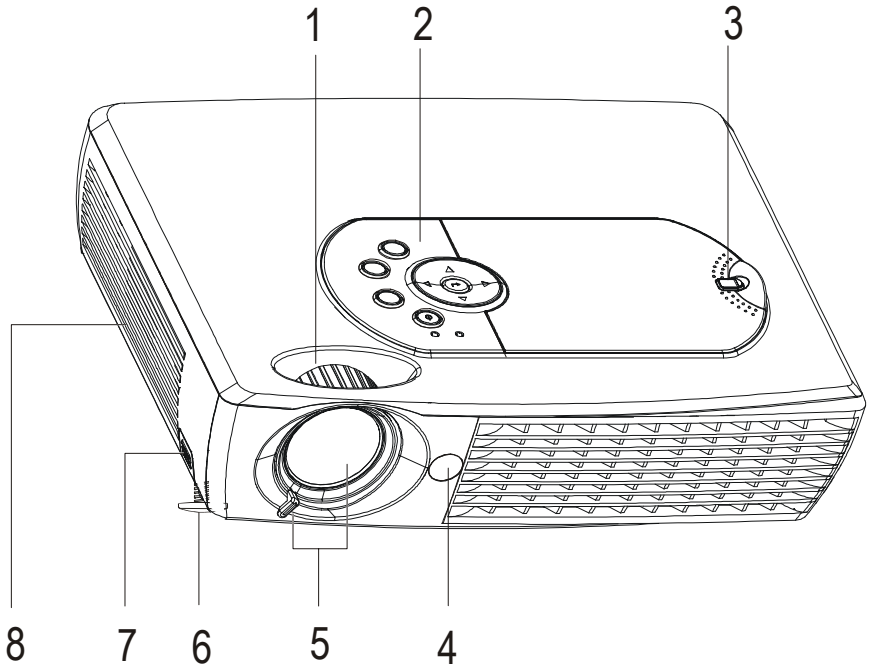

ITEM	LABEL	DESCRIPTION	SEE PAGE:
	Zoom	Enlarge or shrink the projected image	*15*
	See OSD buttons and LEDs next page		*3*
1.	Projection lamp cover	Remove when changing lamp	*26*
2.	IR receiver	Receiver for IR signal from remote control	*9*
3.	Lens/focus	Remove cover, turn the lens to focus	*15*
4.	Height adjuster	Adjusters drop down when adjuster button is pushed	*14*
5.	Height adjuster button	Push to release height adjuster	
6.	Speaker	Built-in mono speaker	

Important:
Grill openings on the projector allow for good air circulation, which keeps the projector lamp cool. Do not obstruct any of the grill openings.

Top view—OSD buttons and LEDs

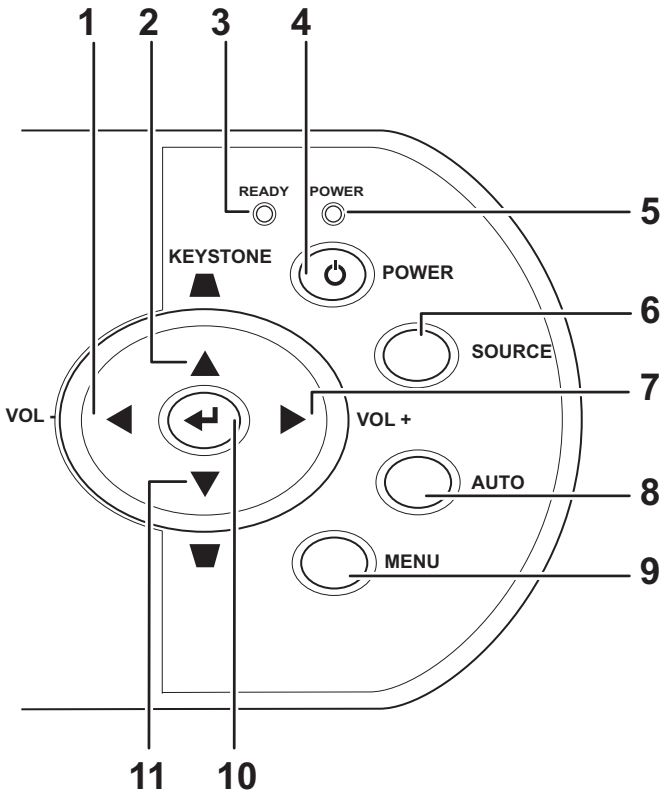

ITEM	LABEL	DESCRIPTION		SEE PAGE:
1.	Volume/ left cursor	Decreases volume Navigates and changes settings in the OSD		***16***
2.	Keystone/ Up cursor	Corrects image-trapezoid (narrower top) effect Navigates and changes settings in the OSD		***15***
3.	Ready (LED)	Orange	Lamp ready—you can safely turn on or off the projector	
		Flashing	Lamp not ready—do not press the power button	
4.	Power	Turns the projector on or off (main power switch must be turned on first, see item 8 on page 5)		***13***
5.	Power (LED)	Green	Unit is powered on and working correctly	
		Off	Unit is powered off	
		Flashing	Operational error code (refer to “LED Error Messages” on page 31)	
6.	Source	Detects the input device		***13***
7.	Volume/ right cursor	Increases volume Navigates and changes settings in the OSD		***17***

ITEM	LABEL	DESCRIPTION	SEE PAGE:
8.	Auto	Optimizes image size, position, and resolution	*17*
9.	Menu	Opens/exits the On-Screen Display (OSD)	
10.	Enter	Changes settings in the OSD	
11.	Keystone/ Down cursor	Corrects image-trapezoid (narrower bottom) effect Navigates and changes settings in the OSD	*15*

Rear view—connectors

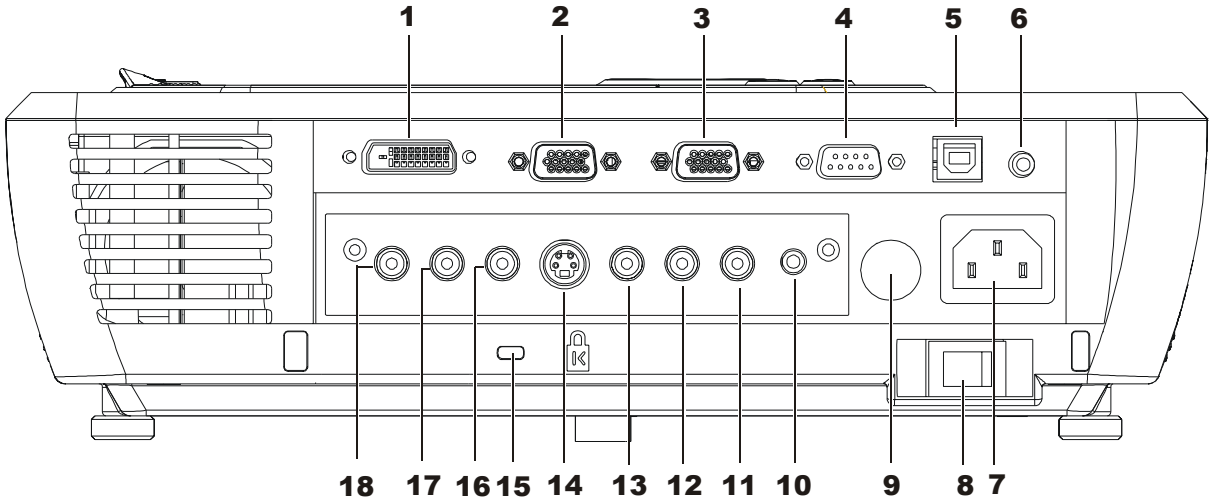

ITEM	LABEL	DESCRIPTION	SEE PAGE:
1.	DVI-I	Connect the DVI cable (supplied) from a computer	***12***
2.	RGB IN	Connect a VGA cable (not supplied) from a computer	
3.	RGB OUT	Connect to a monitor	
4.	RS-232	Installation control and firmware upgrades	
5.	USB	Connect the USB cable (supplied) from a computer	
6.	Audio-in	Connect the audio cable (supplied) from the input device	
7.	Power connector	Connect the supplied power cord	
8.	Main power	Turns the main power on or off	
9.	IR receiver	Receiver for IR signal from remote control	***9***
10.	Audio-out	Audio output	***12***
11.	Audio-in-R	Connect an RCA audio cable (not supplied) from the input device right channel	
12.	Audio-in-L	Connect an RCA audio cable (not supplied) from the input device left channel	
13.	Video	Connect a composite video cable (not supplied)from a video device	
14.	S-video	Connect the supplied S-video cable from a video device	
15.	Kensington Lock	Secure to permanent object with a Kensington Lock system	***29***

ITEM	LABEL		DESCRIPTION	SEE PAGE:
16.	Pr/Cr	Component video in	Connect a component video enabled device	*12*
17.	Pb/Cb			
18.	Y			

Note:
If your video equipment has both S-video and RCA jacks (composite video) connect to the S-video connector.
S-video provides a better quality signal.

Bottom view

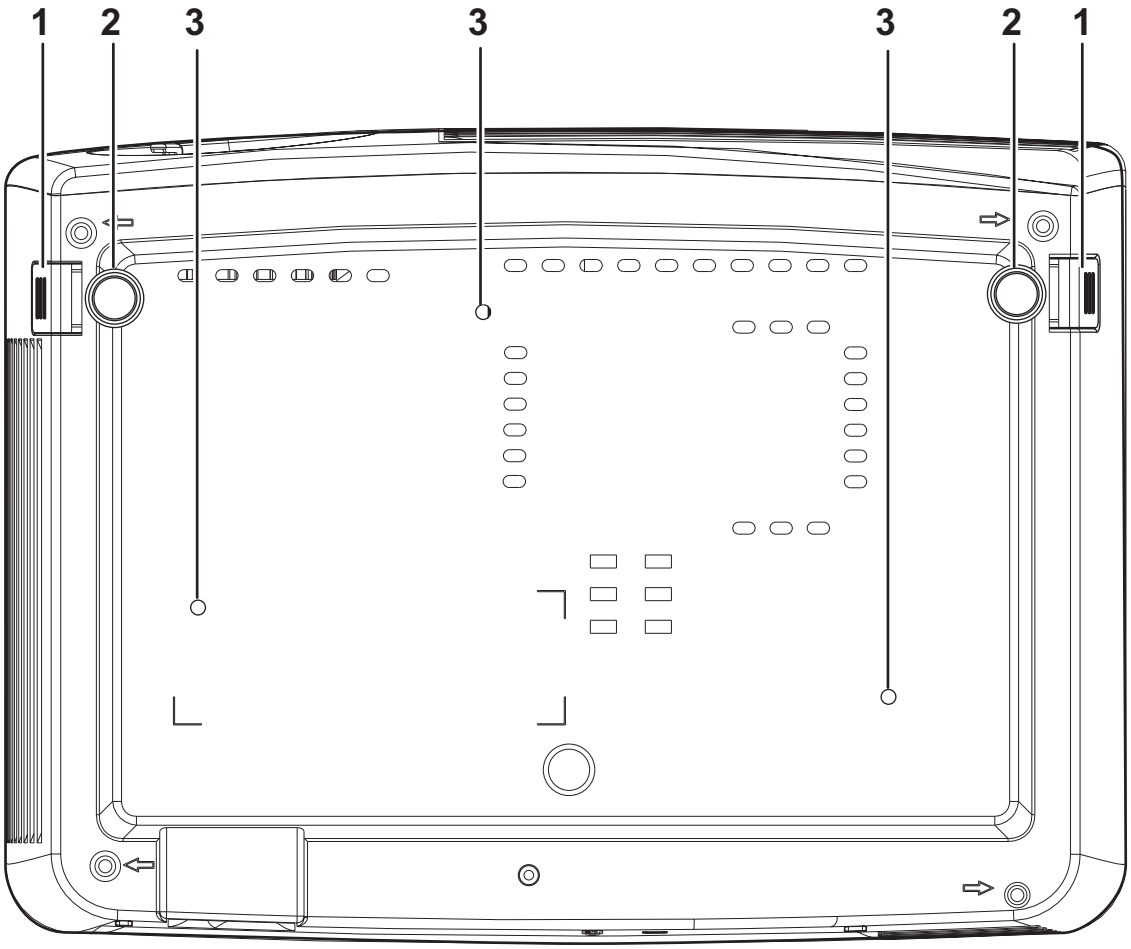

ITEM	LABEL	DESCRIPTION	SEE PAGE:
1.	Height adjuster buttons	Push to release height adjusters	***14***
2.	Height adjusters	Adjusters drop down when adjuster buttons are pushed	
3.	Ceiling support holes	Contact your dealer for information on mounting the projector on a ceiling.	

Remote Control Parts

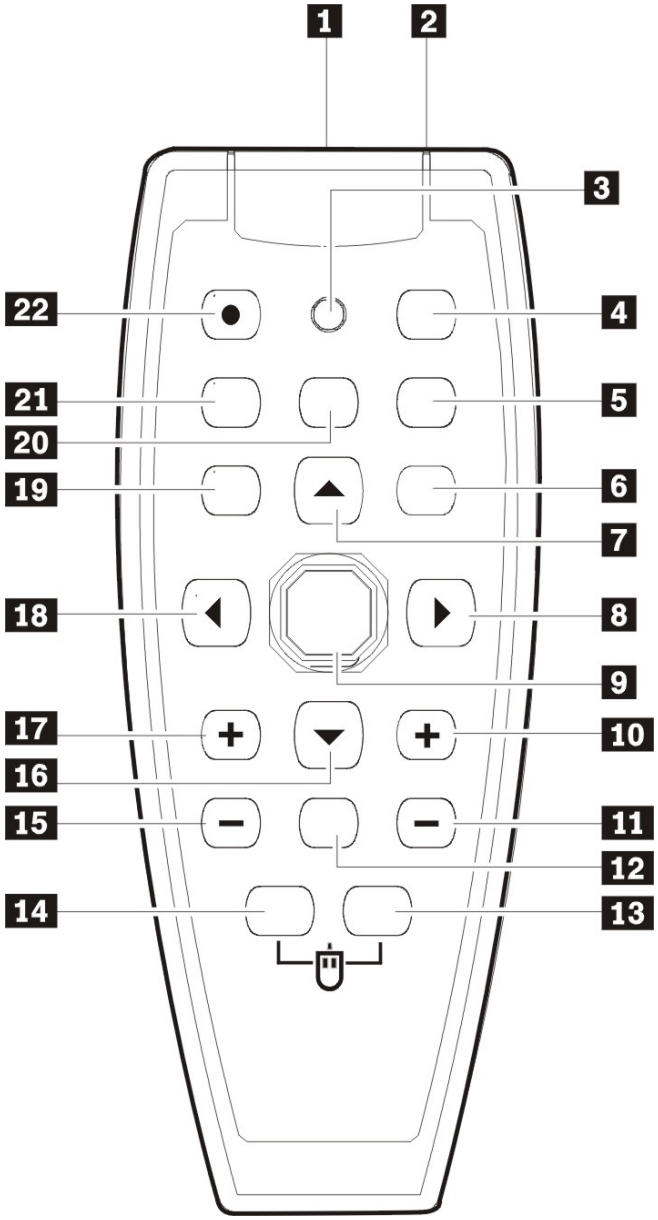

Important:
1. *Avoid using the projector with bright fluorescent lighting turned on. Certain high-frequency fluorescent lights can disrupt remote control operation.*

2. *Be sure nothing obstructs the path between the remote control and the projector. If the path between remote and projector is obstructed, you can bounce the remote signal off certain reflective surfaces such as projector screens.*

ITEM	LABEL	DESCRIPTION	SEE PAGE:
1.	Laser	Use as on-screen pointer. DO NOT POINT IN EYES.	
2.	IR transmitter	Transmits signals to projector	
3.	Status LED	Lights when the remote control is used	
4.	Auto	Optimizes image size, position, and resolution	
5.	Blank	Makes the screen blank	*22*
6.	Enter	Changes settings in the OSD	*17*
7.	Up cursor	Navigates and changes settings in the OSD	
8.	Right cursor		
9.	Cursor pad	Moves the on-screen cursor when connected to a PC	
10.	Keystone top	Corrects image-trapezoid (narrower top/bottom) effect	*15*
11.	Keystone bottom		
12.	Mute	Mutes the built-in speaker	
13.	Right mouse	Functions as right mouse button when connected to a PC	
14.	Left mouse	Functions as left mouse button when connected to a PC	
15.	Volume down	Adjusts volume	*16*
16.	Volume up		
17.	Down cursor	Navigates and changes settings in the OSD	*17*
18.	Left cursor		
19.	Menu	Opens the On-Screen Display (OSD)	
20.	Freeze	Freeze/unfreezes the on-screen picture	
21.	Source	Detects the input device	*13*
22.	Power	Turns the projector on or off	*13*

Remote Control Operating Range

The remote control uses infrared transmission to control the projector. It is not necessary to point the remote directly at the projector. Provided you are not holding the remote perpendicular to the sides or the rear of the projector, the remote functions within a radius of about (7) meters (23 feet) and 30 degrees above or below the projector level. If the projector does not respond to the remote control, move a little closer.

Projector and Remote Control Buttons

The projector can be operated using the remote control or the buttons on the top of the projector. All operations can be carried out with the remote control; however the buttons on the projector are limited in use. The following illustration shows the corresponding buttons on the remote control and on the projector.

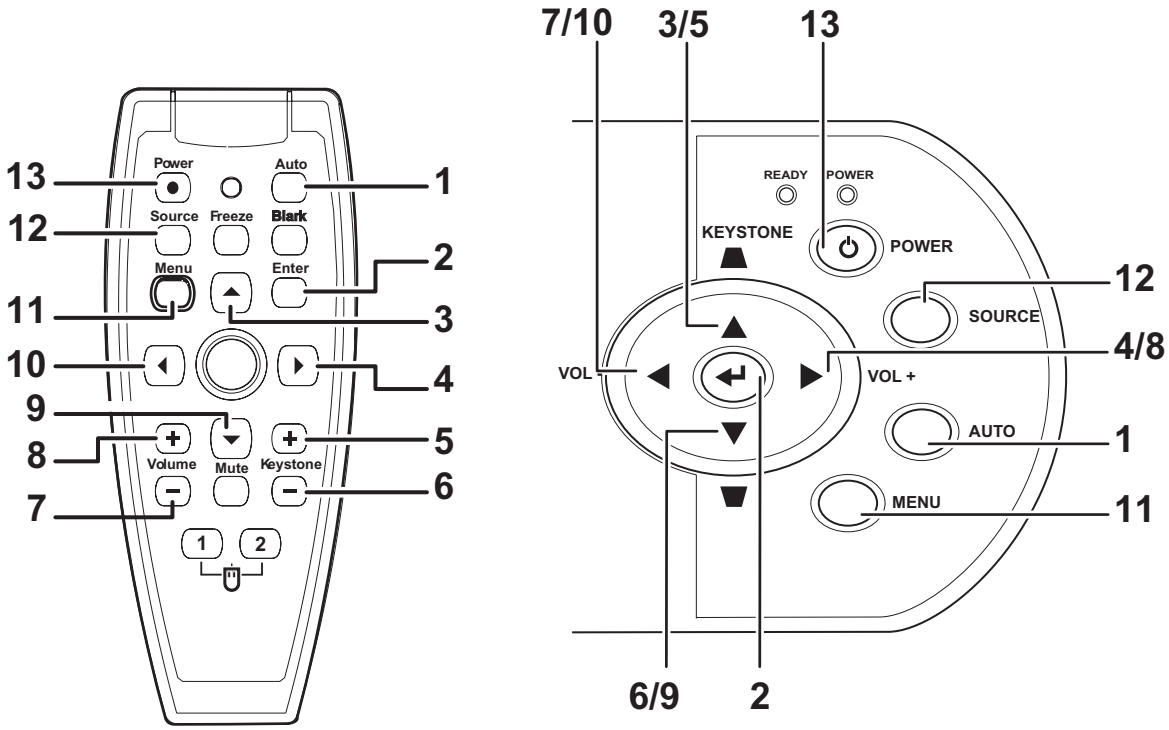

Some buttons on the projector have two functions. For example, item 7/10 on the projector functions both as the volume down button and as the left cursor key in OSD menus.

Inserting the Remote Control Batteries

1. Remove the battery compartment cover by sliding the cover in the direction of the arrow.

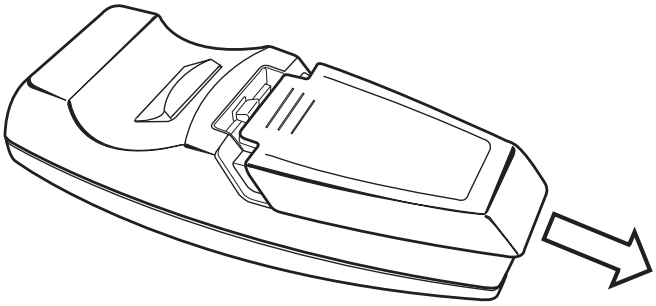

2. Insert the supplied batteries taking note of the polarity (+/-) as shown here.

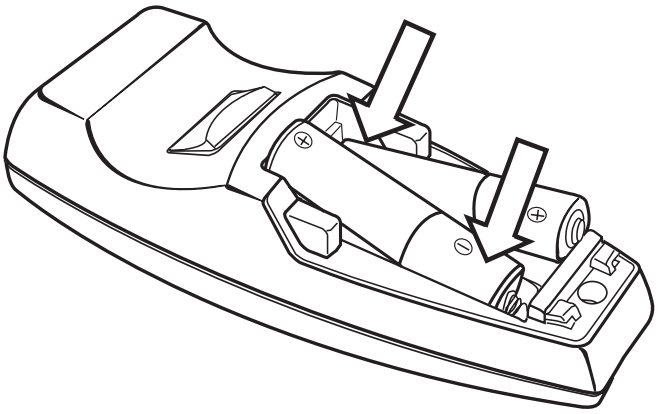

3. Replace the cover.

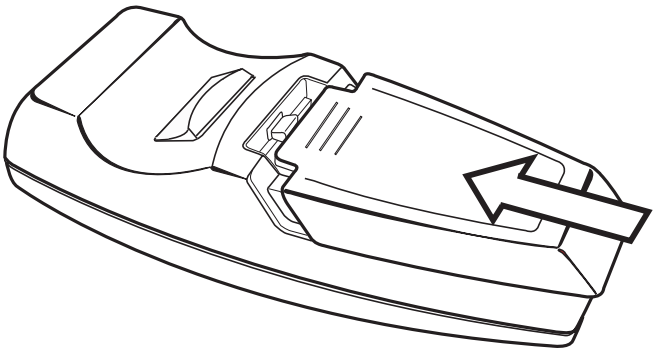

Caution:
1. *Only use AAA alkaline batteries.*

2. *Dispose of used batteries according to local ordinance regulations.*

3. *Remove the batteries when not using the projector for prolonged periods.*

Connecting Input/output Devices

A PC or notebook computer as well as video devices can be connected to the projector at the same time. Video devices include DVD, VCD, and VHS players, as well as movie camcorders and digital still cameras. Check the user manual of the connecting device to confirm it has the appropriate input/output connector.

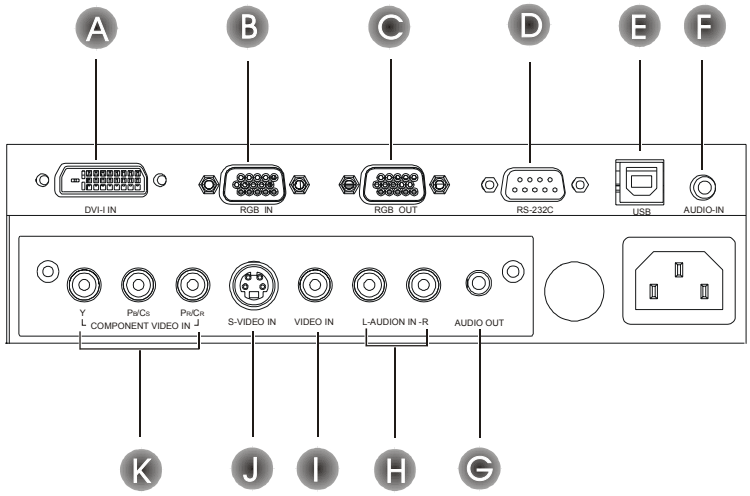

ITEM	LABEL	DESCRIPTION
A	DVI-I	Connect the supplied DVI cable from a computer.
B	RGB in	Connect a VGA cable (not supplied) from a computer.
C	RGB out	Connect a VGA cable (not supplied) to a monitor.
D	RS-232	Reserved for installation control and firmware upgrades.
E	USB	Connect the supplied USB cable from a computer.
F	Audio-in	Connect an audio cable (not supplied) from the computer's audio-out connector.
G	Audio-out	Audio output.
H	L-Audio in-R	Connect the audio cable (not supplied) from an audio input device.
I	Video	Connect a composite video cable (not supplied) from a video device.
J	S-video	Connect the supplied S-video cable from a video device.
K	Component video in	Connect a component video cable (not supplied) from a video device.

Warning:
As a safety precaution, disconnect all power to the projector and connecting devices before making connections.

Starting and Shutting down the Projector

1. Connect the power cord to the projector. Connect the other end to a wall outlet. (A)
Turn on the power switch. (B)
The Power LED and Lamp-ready LED turn on.

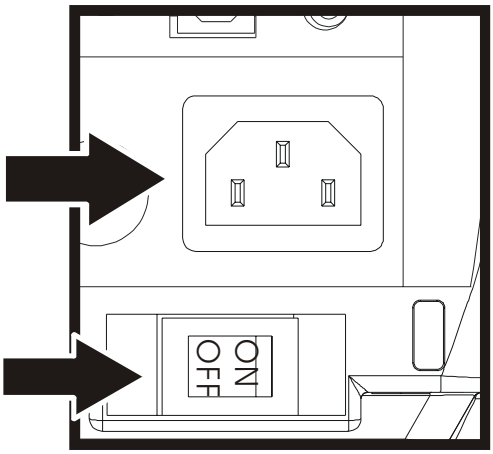

2. Remove the lens cover.

3. Turn on the connected devices.

4. Ensure the Lamp-ready LED is on a steady (not flashing) orange and then press the **Power** button to turn on the projector.

   The projector splash screen displays and connected devices are detected. If the connected device is a PC, press the appropriate Fn hot keys on the computer keyboard to switch the display output to the projector. (Check the PC user manual to determine the appropriate Fn hot keys to change display output.)

5. If more than one input device is connected, press the **Source** button repeatedly to switch among devices.

6. To turn off the projector, press the **Power** button. The projector prepares for shutdown and a "Wait a moment please…" message appears.

7. When the "Power Off?/Press Power again" message appears, press the **Power** button. The projector turns off.

Attention : Power off the projector normally and unplug the power cord before moving the projector

Adjusting the Projector Level

Take note of the following when setting up the projector:

- *The projector table or stand should be level and sturdy.*
- *Position the projector so that it is perpendicular to the screen.*
- *Be sure cables are not in the way or can cause the projector to be knocked over.*

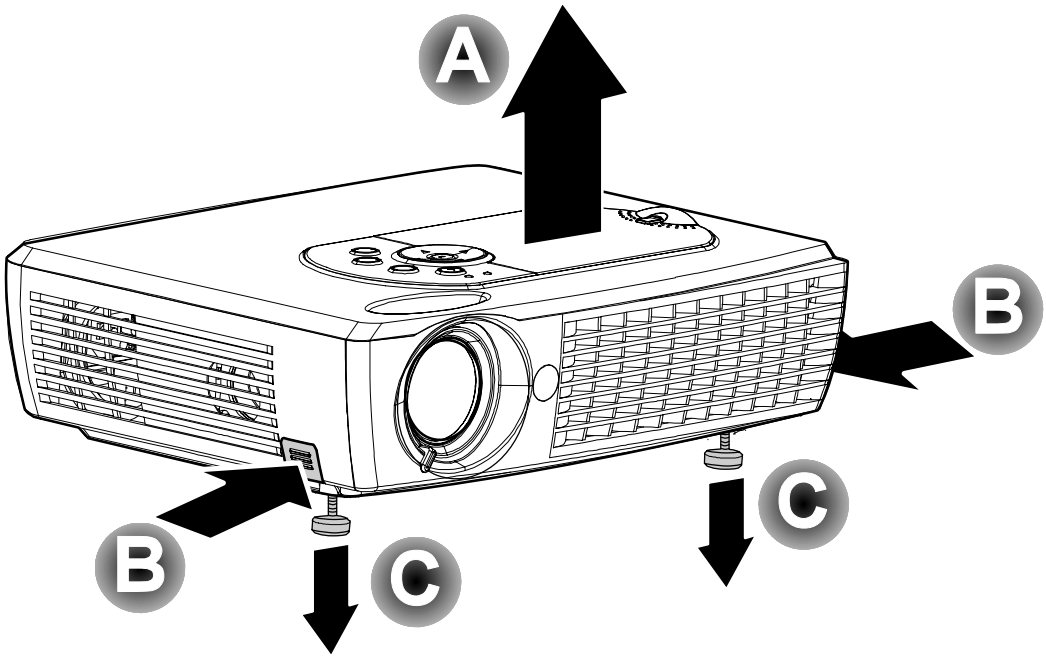

1. To raise the level of the projector, lift the projector **[A]** and press the height-adjuster buttons **[B]**.

The height-adjusters drop down **[C]**.

2. To lower the level of the projector, press the height-adjuster buttons and push down on the top of the projector.

Adjust the Zoom, Focus and Keystone

1. Use the **Image-zoom** control (on the projector only) to resize the projected image and screen size A.

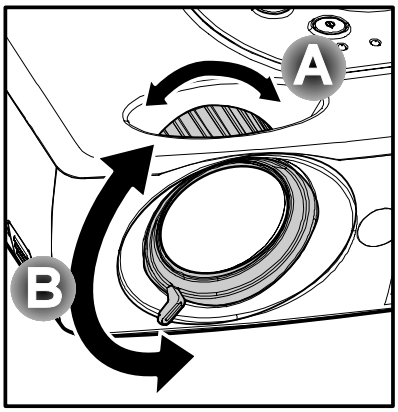

2. Use the **Image-focus** control (on the projector only) to sharpen the projected image B

3. Use the **Keystone** buttons (on the projector or the remote control) to correct image-trapezoid (wider top or bottom) effect.

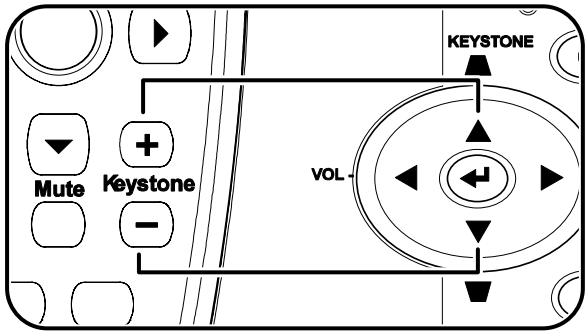

The keystone control appears on the display.

Adjusting the Volume

1. Press the **Volume** +/- buttons on the projector or the remote control. The volume control appears on the display.

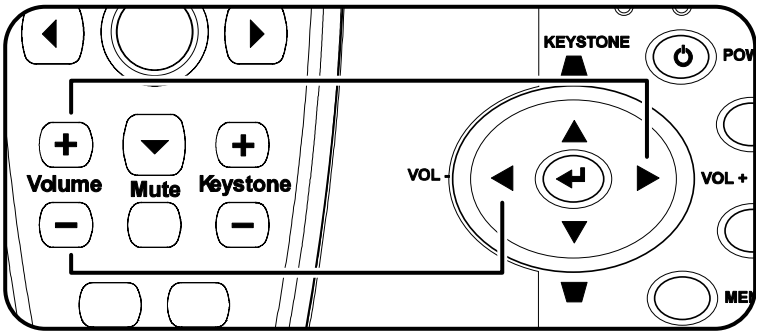

2. Use the **Volume** +/- buttons to adjust the level.

3. Press the **Mute** button (on the remote control only) to turn off the volume.

4. Press **Volume** +/- or **Mute** on the remote control to turn off mute.

On-Screen Display Menu Controls

The projector has an On-Screen Display (OSD) that lets you make image adjustments and change various settings.

Navigating the OSD

You can use the remote control or the buttons on the top of the projector to navigate and make changes to the OSD. The following illustration shows the corresponding buttons on the remote control and on the projector.

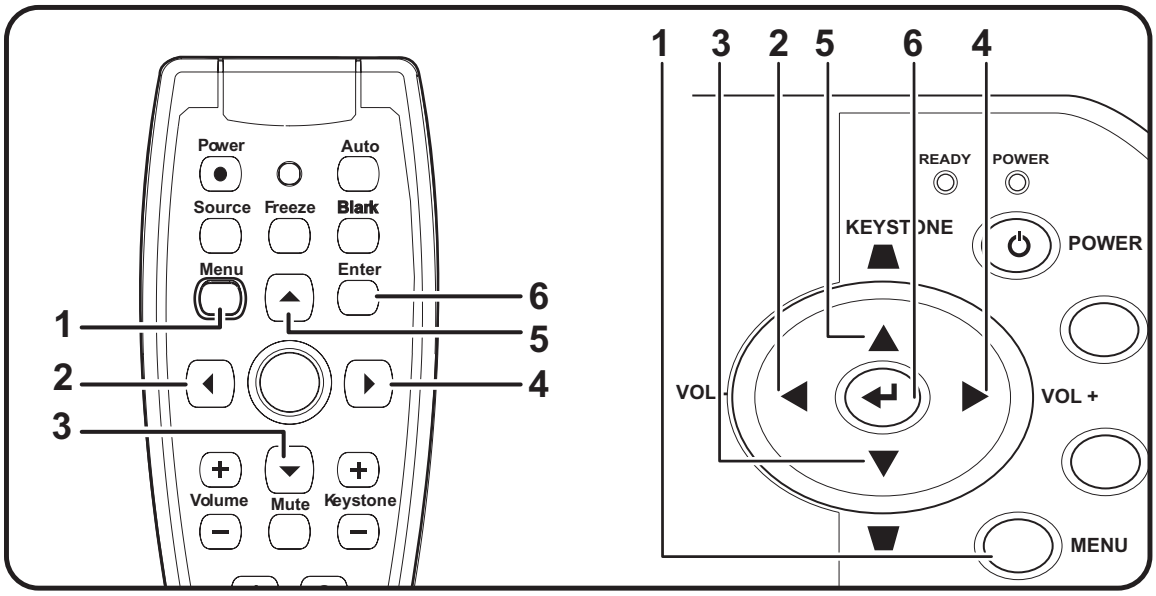

Setting the OSD Language

You may want to reference the OSD on your projector while reading this section. Set the OSD language to your preference before continuing. (The default language is English.)

1. Press the **Menu** button. The **Main** menu appears.

2. Press ◄► until **Language** is highlighted.

3. Press ▲▼ until the language you want is highlighted.
4. Press the **Enter** button to select the language.
5. Press the **Menu** button twice to close the OSD.

Main Menu

Press the **Menu** button to open the **OSD** menu. If necessary, press ◄► to move to the **Main** menu. Press ▲▼ to move up and down in the **Main** menu. Press ◄► to change values for settings, and then press **Enter** to confirm the new setting.

ITEM	DESCRIPTION	DEFAULT
Brightness	Press ◄►to adjust the brightness. (Range: 0—100)	50
Contrast	Press ◄► to adjust the contrast. (Range: 0—100)	50
Sharpness	Press ◄► to adjust the display sharpness (Range: 1-5)	3
Color Temperature	Press ◄► to adjust the video tint/hue. (Range: Cool/Normal/Warm)	Normal
Color Saturation	Press ◄► to adjust the video saturation. (Range: 0—100)	50
Color Tint	Press ◄►to adjust the video tint/hue. (Range: 0—100)	50
Gamma	Press ◄► to adjust the gamma correction of the display. **Input** **Gamma** **Brightness** PC 2.2 High MAC 1.8 High Video 2.4 Low Chart 2.2 Low B&W 2.4 High	PC
Color Space	Press ◄► to adjust the color space. (Range: Auto—RGB—YPbPr—YCbCr)	Auto
Reset	Resets all **Main** items settings except Color Saturation to default values	-

Main Menu Items Supported for Each Input Source

Depending on the video source not all items in the OSD are available. Items that are available for each input source are marked with “X”. Items that are not available can not be selected in the OSD.

Function	RGB	DVI	Component Video	Composite Video	S-Video
Brightness	X	X	X	X	X
Contrast	X	X	X	X	X
Sharpness	X	X	X	X	X
Color Temperature	X	X	X	X	X
Color Saturation			X	X	X
Color Tint			X	X	X
Gamma	X	X	X	X	X

Setup Menu

Press the **Menu** button to open the **OSD** menu. Press ◄► to move to the **Setup** menu. Press ▲▼ to move up and down in the **Setup** menu. Press ◄► to change values for settings, and then press **Enter** to confirm the new setting.

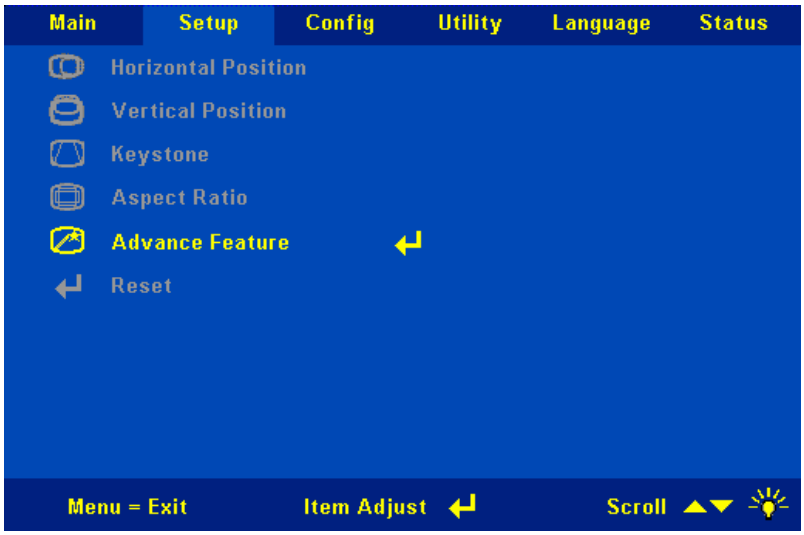

ITEM	DESCRIPTION	DEFAULT
Horizontal Position	Press ◄► to move the image left or right. (Range: 0—100)	50
Vertical Position	Press ◄► to move the image up or down. (Range: 0—100)	50
Keystone	Press ◄► to correct distortion of the projected image. (Range: -50—50)	0
Aspect Ratio	Press ◄► to toggle between the 4:3 standard format and 16:9 High Definition TV (HDTV) format.	4:3
Reset	Resets Keystone and Aspect Ratio to default values	

Setup Menu Items Supported for Each Input Source

Depending on the video source not all items in the OSD are available. Items that are available for each input source are marked with "X". Items that are not available can not be selected in the OSD.

Function	RGB	DVI	Component Video	Composite Video	S-Video
Horizontal Position	X				
Vertical Position	X				
Keystone	X	X	X	X	X

Config Menu

Press the **Menu** button to open the **OSD** menu. Press ◄► to move to the **Config** menu. Press ▲▼ to move up and down in the **Config** menu. Press ◄► to change values for settings, and then press **Enter** to confirm the new setting.

ITEM	DESCRIPTION	DEFAULT
Blank Screen	Press ◄► to select a background color for blank screen (Range: Black – Red—Green—Blue—White)	Blue
Auto Source	Press ◄► to enable or disable automatic source detection (Range: On—Off)	On
Auto Power Off	Press ◄► to enable or disable automatic shut-down of lamp after 10 minutes of inactivity (Range: On—Off)	Off
Volume	Press ◄► to adjust the audio volume level (Range: 0 - 10)	5
Menu Position	Press ◄► to position the OSD on screen (Range: Left—Right—Center—Down—Up)	Center
Menu Display	Press ◄► to determine the timeout delay of the OSD (Range: 10 - 20 sec.)	15
Translucent Menu	Press ▲▼ to set menu screen translucency (Range: On—Off)	Off
Reset	Resets all Config screen items to default values	

Utility Menu

Press the **Menu** button to open the **OSD** menu. Press ◄► to move to the **Utility** menu. Press ▲▼ to move up and down in the **Utility** menu. Press ◄► to change values for settings, and then press **Enter** to confirm the new setting.

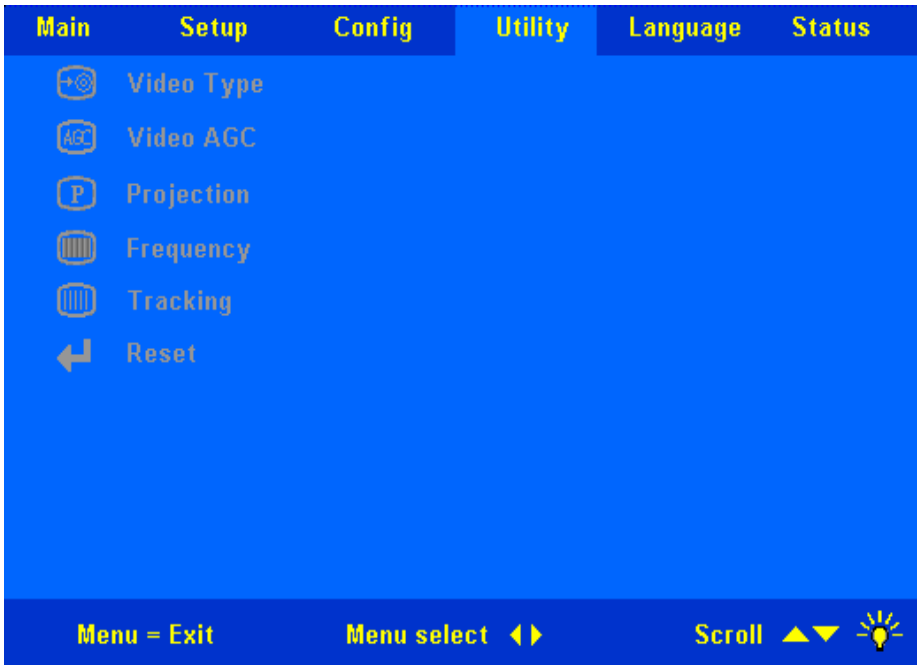

ITEM	DESCRIPTION	DEFAULT
Video Type	Press ◄► to select the video standard. (Range: Auto—NTSC—PAL—SECAM)	Auto
Video AGC	Press ◄► to enable or disable automatic gain control for the video source. (Range: On—Off)	On
Projection	Press ◄► to choose from four projection methods: P Desktop mount, front of screen q Desktop mount, rear of screen d Ceiling mount, front of screen b Ceiling mount, rear of screen	Desktop front P
Frequency	Press ◄► to adjust the A/D sampling clock. (Range: 0—180)	Auto detected
Tracking	Press ◄► to adjust the A/D sampling number. (Range: 0—100)	Auto detected
Reset	Resets Video Type, Video AGC, and Projection to default values	

Language Menu

Press the **Menu** button to open the **OSD** menu. Press ◄► to move to the **Language** menu. Press ▲▼ to move up and down in the **Language** menu.

ITEM	DESCRIPTION	DEFAULT
English	Press the cursor ▲▼ button to move up and down in the menu. Press the **Enter** button to select the language.	English
French		
German		
Italian		
Spanish		
Swedish		
Chinese Simplified		
Chinese Traditional		
Japanese		
Korean		

Status Menu

Press the **Menu** button to open the **OSD** menu. Press ◄► to move to the **Status** menu. Press ▲▼ to move up and down in the **Status** menu. Press ◄► to change values for settings, and then press **Enter** to confirm the new setting.

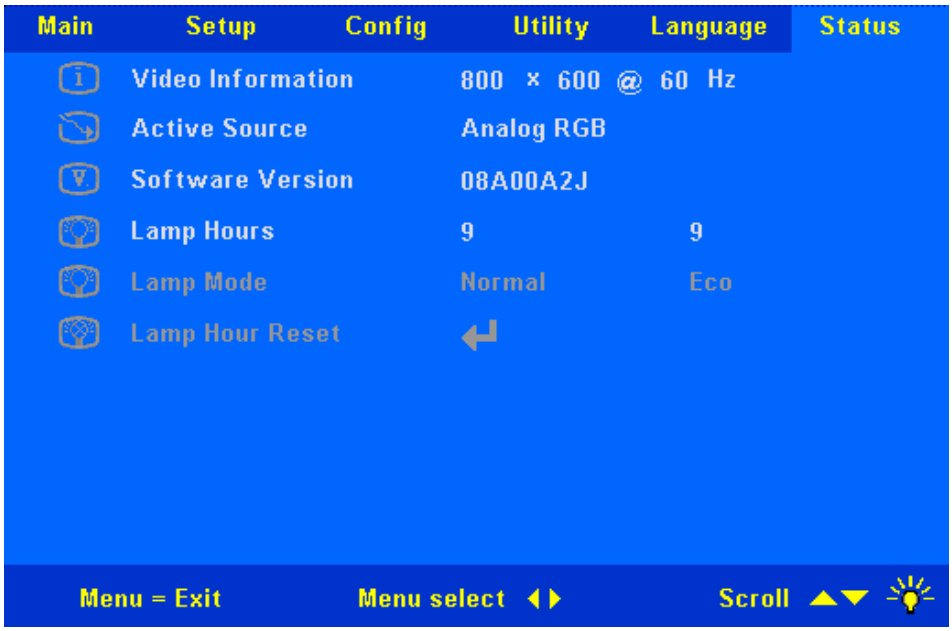

ITEM	DESCRIPTION	DEFAULT
Video Information	Displays the resolution and refresh rate of the connected video device.	These items are display only.
Active Source	Displays the active source.	
Software Version	Information about the firmware version.	
Lamp Hours	Number of hours lamp has been in Normal use and number of hours lamp has been in Eco use.	
Lamp Mode	Toggles between Normal and ECO lamp modes. ECO mode uses less power but decreases the lamp brightness.	Normal
Lamp Hour Reset	After replacing the lamp, this item should be reset. Refer to "Replacing the Projection Lamp" on page 26.	—

Replacing the Projection Lamp

The projection lamp should be replaced when it burns out. It should only be replaced with a certified replacement part, which you can order from your local dealer.

Important:
1. *The lamp contains a certain amount of mercury and should be disposed of according to local ordinance regulations.*

2. *Avoid touching the glass surface of the new lamp: Doing so may shorten its operation life.*

Warning:
1. *Be sure to turn off and unplug the projector at least an hour before replacing the lamp. Failure to do so could result in a severe burn.*

2. *It is recommended that you do not attempt to replace the lamp while the projector is installed on a ceiling. If you do attempt this, wear protective goggles to prevent glass from a ruptured lamp getting into your eyes.*

1. Lift the screw cover (**A**). Remove the screw on the lamp compartment cover (**B**) and then lift the lamp compartment cover (**C**).

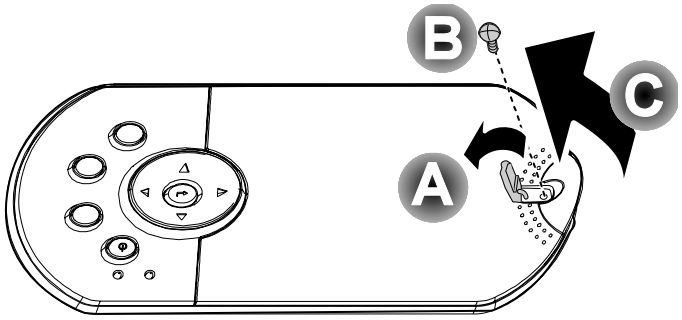

2. Remove the two screws from the lamp module (**A**) and then lift the module handle up (**B**).

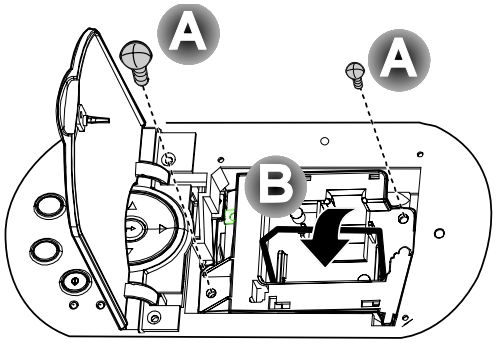

3. Pull up firmly to remove the lamp module.

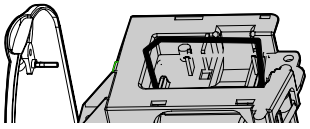

4. Reverse Steps 1 to 4 to install the new lamp module.
Note: The lamp module should be oriented as shown here when replacing.

Resetting the Lamp

After replacing the lamp, reset the lamp hour counter to zero. Refer to the following:

1. Press the **Menu** button to open the Main menu.

2. Press the cursor ◄► button to move to the **Status** menu.

3. Press the cursor ▲▼ button to move to **Lamp Hour Reset**.

4. Press the **Enter** button.
A message screen appears.

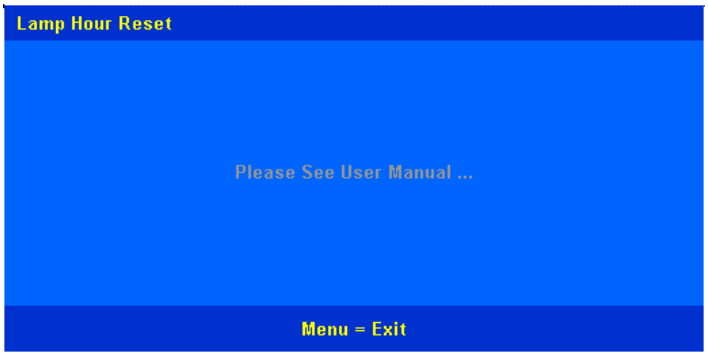

5. Press the cursor buttons in this order: ▼; ▲; ◄; ►.

The "Lamp Hour Reset OK !!" message appears. Then the **Status** menu appears again showing the **Lamp Hours** reset to zero.

Cleaning the Projector

Cleaning the projector to remove dust and grime will help ensure trouble-free operation.

Warning:
1. *Be sure to turn off and unplug the projector at least an hour before cleaning. Failure to do so could result in a severe burn.*

2. *Use only a dampened cloth when cleaning. Do not allow water to enter the ventilation openings on the projector.*

3. *If a little water gets into the projector interior while cleaning, leave unplugged in a well-ventilated room for several hours before using.*

4. *If a lot of water gets into the projector interior when cleaning, have the projector serviced.*

Cleaning the Lens

You can purchase optic lens cleaner from most camera stores. Refer to the following to clean the projector lens.

1. Apply a little optic lens cleaner to a clean soft cloth. (Do not apply the cleaner directly to the lens.)
2. Lightly wipe the lens in a circular motion.

Caution:
1. *Do not use abrasive cleaners or solvents.*

2. *To prevent discoloration or fading, avoid getting cleaner on the projector case.*

Cleaning the Case

Refer to the following to clean the projector case.

1. Wipe off dust with a clean dampened cloth.
2. Moisten the cloth with warm water and mild detergent (such as used to wash dishes), and wipe the case.
3. Rinse all detergent from the cloth and wipe the projector again.

Caution:
To prevent discoloration or fading of the case, do not use abrasive alcohol-based cleaners.

Using the Kensington Lock

If you are concerned about security, attach the projector to a permanent object with the Kensington slot and a security cable.

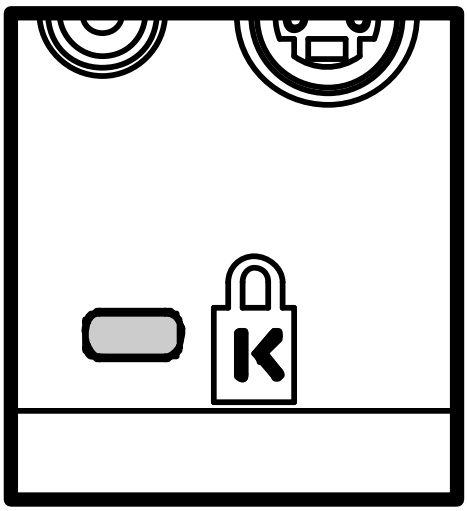

Note:
Contact your vendor for details on purchasing a suitable Kensington security cable.

Common problems and solutions

These guidelines provide tips to deal with problems you may encounter while using the projector. If the problem remains unsolved, contact your dealer for assistance.

Often after time spent troubleshooting, the problem is traced to something as simple as a loose connection. Check the following before proceeding to the problem-specific solutions.

- *Use some other electrical device to confirm that the electrical outlet is working.*
- *Ensure the projector is turned on.*
- *Ensure all connections are securely attached.*
- *Ensure the attached device is turned on.*
- *Ensure a connected PC is not in suspend mode.*
- *Ensure a connected notebook computer is configured for an external display. (This is usually done by pressing an Fn-key combination on the notebook.)*

Tips for Troubleshooting

In each problem-specific section, try the steps in the order suggested. This may help you to solve the problem more quickly.

Try to pin point the problem and thus avoid replacing non-defective parts.
For example, if you replace batteries and the problem remains, put the original batteries back and go to the next step.

Keep a record of the steps you take when troubleshooting: The information may be useful when calling for technical support or for passing on to service personnel.

LED Error Messages

LED	STATUS/ NUMBER OF FLASHES	DESCRIPTION	REMEDY
Power	Flashing	Lamp not ready	Do not press the power button.
	3	System overheated	Allow the projector to cool down.
	4	System interface error	Contact your dealer for assistance.
	5	Lamp error	Replace the lamp module.
	6	Fan error	Refer to **Ready** LED status in this table to determine which fan.
	7	Lamp cover open	Close the lamp cover.
	8	DLP driver error	Contact your dealer for assistance.
	9	Color wheel error	
Ready	Flashing	Valid only when fan error indicated by **Power** LED flashing 6 times.	
	1	Blower fan	Contact your dealer for assistance.
	2	Optical engine fan	
	3	Lamp fan or Optical fan	

Image Problems

Problem: No image appears on the screen

1. Verify the settings on your notebook or desktop PC.
2. Turn off all equipment and power up again in the correct order.

Problem: The image is blurred

1. Adjust the **Focus** on the projector.
2. Press the **Auto** button on the remote control or projector.
3. Ensure the projector-to-screen distance is within the 8-meter (26-feet) specified range.
4. Check that the projector lens is clean.
5. Make sure the output resolution from the PC is 800 x 600 (SVGA model) or 1024 x 768 (XGA model), the native resolution of the projector.

Problem: The image is wider at the top or bottom (trapezoid effect)

1. Position the projector so it is as perpendicular to the screen as possible.
2. Use the Keystone button on the remote control or projector to correct the problem.

Problem: The image is reversed or upside down

1. Check the **Projection** setting on the **Utility** menu of the OSD.

Problem: The image is streaked

1. Set the **Frequency** and **Tracking** settings on the **Utility** menu of the OSD to the default settings.
2. To ensure the problem is not caused by a connected PC's video card, connect to another computer.

Problem: The image is flat with no contrast

1. Adjust the **Contrast** setting on the **Main** menu of the OSD.

Problem: The color of the projected image does not match the source image.

1. Adjust the **Color Temperature** and **Gamma** settings on the **Main** menu of the OSD.

Lamp Problems

Problem: There is no light from the projector

1. Check that the power cable is securely connected.
2. Ensure the power source is good by testing with another electrical device.
3. Restart the projector in the correct order and check that the Power LED is green.
4. If you have replaced the lamp recently, try resetting the lamp connections.
5. Replace the lamp module.
6. Put the old lamp back in the projector and have the projector serviced.

Problem: The lamp goes off

1. Power surges can cause the lamp to turn off. Press the power button twice to turn off the projector. When the Lamp Ready LED is on, press the power button.
2. Replace the lamp module.
3. Put the old lamp back in the projector and have the projector serviced.

Remote Control Problems

Problem: The projector does not respond to the remote control

1. Direct the remote control towards the remote sensor on the projector.
2. Ensure the path between remote and sensor is not obstructed.
3. Turn off any fluorescent lights in the room.
4. Check the battery polarity of the remote control.
5. Replace the batteries.
6. Turn off other Infrared-enabled devices in the vicinity.
7. Have the remote control serviced.

Audio Problems

Problem: There is no sound

1. Adjust the projector volume.
2. Adjust the volume of the audio source.
3. Check the audio cable connection.
4. Test the source audio output with other speakers.
5. Have the projector serviced.

Problem: The sound is distorted

1. Check the audio cable connection.
2. Test the source audio output with other speakers.
3. Have the projector serviced.

Having the Projector Serviced

If you are unable to solve the problem, you should have the projector serviced. Pack the projector in the original carton. Include a description of the problem and a checklist of the steps you took when trying to fix the problem. The information may be useful to the service personnel. Return the projector to the place you purchased it.

Specifications

	XGA
Power consumption	< 300 watts
Lamp	200W (ECO mode 160W)
Display type	TI DMD 0.7-inch, 12 deg. DDR
Resolution	XGA 1024 x 768 native
Bandwidth	Up to SXGA 1280 x 1024 @ 60 Hz
Color	16.7 Million (24-bits/pixel)
Weight	3.55 kg (7.8 lbs)
Projection distance	1.5 to 8 meter (4.9 to 26 feet)
Projection screen size	0.94 to 6.1 meter (37 inches to 240 inches)
Projection lens	Manual zoom and focus
Zoom ratio	1.22:1
Vertical keystone correction	+ / - 15
Projection methods	Desktop front/rear; ceiling front/rear
Data Compatibility	IBM PC or compatibles (VGA, SVGA), Mac
HDTV	Video
Video compatibility	NTSC/NTSC 4.43, PAL (B/G/H/I/M/N 60), SECAM
H-Sync	15,31 - 70 kHz
V-Sync	50 - 85 Hz
Safety certification	FCC Class B, UL, CUL, CE, CB, TUV-GS, CCC
Operation temperature	10° ~ 35°
Dimensions	32.8 x 23.8 x 8.8 cm (12.9 x 9.4 x 3.5 inches)
Standby	< 20 watts
Noise	36 dB typical
Audio speaker	2W mono speaker
Uniformity	80 %

Input/output connectors

PC	DVI-I
	RGB in
	RGB out
	USB
Video	Composite video (RCAx1)
	S-Video (Mini-DIN)
	Component video Y,Pb/Cb,Pr/Cr (RCAx3)
Audio	Mini-jack in
	Mini-jack out
	Right and left in (RCAx2)
Service/upgrades	RS-232
Security	Kensington slot

Projection Distance versus Projection Size

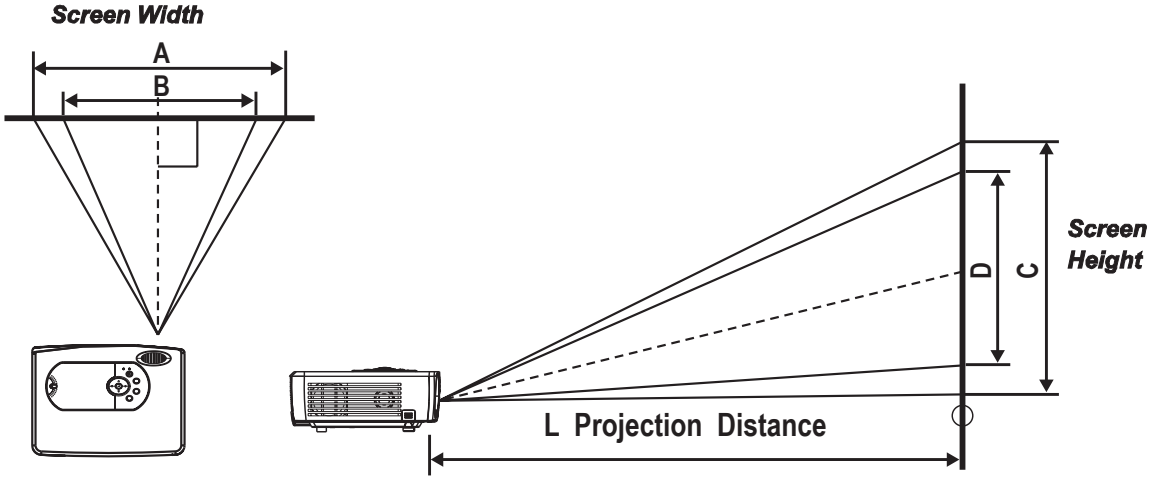

Projection Distance	Max. Screen Size			Min. Screen Size		
	Diagonal	Width	Height	Diagonal	Width	Height
L		A	C		B	D
1.5m	1.14m	0.91m	0.68m	0.94m	0.75m	0.56m
4.92'	45"	36"	27"	36.88"	29.5"	22.1"
2m	1.52m	1.22m	0.91m	1.25m	1m	0.75m
6.56'	60"	48"	36"	49.18"	39.34"	29.51"
2.4m	1.83m	1.46m	1.1m	1.5m	1.20m	0.90m
7.87'	72"	57.6"	43.2"	59"	47.2"	35.4"
2.8m	2.13m	1.71m	1.28m	1.75m	1.4m	1.05m
9.18'	84"	67.2"	50.4"	68.85"	55.08"	41.31"
3.2m	2.44m	1.95m	1.46m	2m	1.6m	1.20m
10.5'	86"	68.8"	51.6"	70.49"	56.39"	42.29"
3.6m	2.74m	2.19m	1.65m	2.25m	1.80m	1.35m
11.81'	108"	86.4"	64.8"	88.52"	70.82"	53.11"
4m	3.05m	2.44m	1.83m	2.5m	2.00m	1.50m
13.12'	120"	96"	72"	98.36"	78.69"	59.02"
4.4m	3.35m	2.68m	2.01m	2.75m	2.2m	1.65m
14.43'	132"	105.6"	79.2"	108.19"	86.55"	64.91"
4.8m	3.66m	2.93m	2.19m	3.00m	2.40m	1.80m
15.74'	144"	115.2"	86.4"	118.03"	94.42"	70.82"
5.2m	3.96m	3.17m	2.38m	3.25m	2.60m	1.95m
17.06'	156"	124.8"	93.6"	127.86"	102.29"	76.72"
5.6m	4.27m	3.41m	2.56m	3.50m	2.80m	2.10m
18.37'	168"	134.4"	100.8"	137.7"	110.16"	82.62"
6m	4.57m	3.66m	2.74m	3.75m	3.00m	2.25m
19.68'	180"	144"	108"	147.54"	118.03"	88.52"
8m	6.10m	4.88m	3.66m	5.00m	4.00m	3.00m
26.24'	240"	192"	144"	196.72"	157.38"	118.03"

Timing Mode Table

The native resolution is 800 x 600 for the SVGA series and 1024 x 768 for the XGA series. Resolution other than native mode may display with uneven size of text or lines.

The following table shows the supported timing modes.

Signal	Resolution	Frequency H. (KHz)	Frequency V. (Hz)	Video	Digital	Analog
NTSC	--	15.734	60.0	O	--	--
PAL / SECAM	--	15.625	50.0	O	--	--
VESA	640 x 350	37.9	85.1	--	O	O
	720 x 400	31.5	70.0	--	O	O
	720 x 400	37.9	85.0	--	O	O
	640 x 480	31.5	60.0	--	O	O
	640 x 480	37.9	72.8	--	O	O
	640 x 480	37.5	75.0	--	O	O
	640 x 480	43.3	85.0	--	O	O
	800 x 600	37.9	60.3	--	O	O
	800 x 600	46.9	75.0	--	O	O
	800 x 600	48.1	72.2	--	O	O
	800 x 600	53.7	85.1	--	O	O
	1024 x 768	48.4	60.0	--	O	O
	1024 x 768	56.5	70.1	--	O	O
	1024 x 768	60.0	75.0	--	O	O
	1024 x 768	68.7	85.0	--	O	O
	1280 x 1024	64.0	60.0	--	O	O
Apple Macintosh	640 x 480	35.0	66.7	--	O	O
	832 x 624	49.7	74.5	--	O	O
	1024 x 768	60.2	74.9	--	O	O
	1152 x 870	68.7	75.1	--	O	O
HDTV	1920 x 1080	33.8	60.0	O	--	--
	1920 x 1080	28.1	50.0	O	--	--
	1280 x 720	45.0	60.0	O	--	--
SDTV	720 x 576	31.3	50.0	O	--	--
	720 x 480	31.5	60.0	O	--	--

O Frequency supported

-- Frequency not supported

For XGA series only

Dimensions

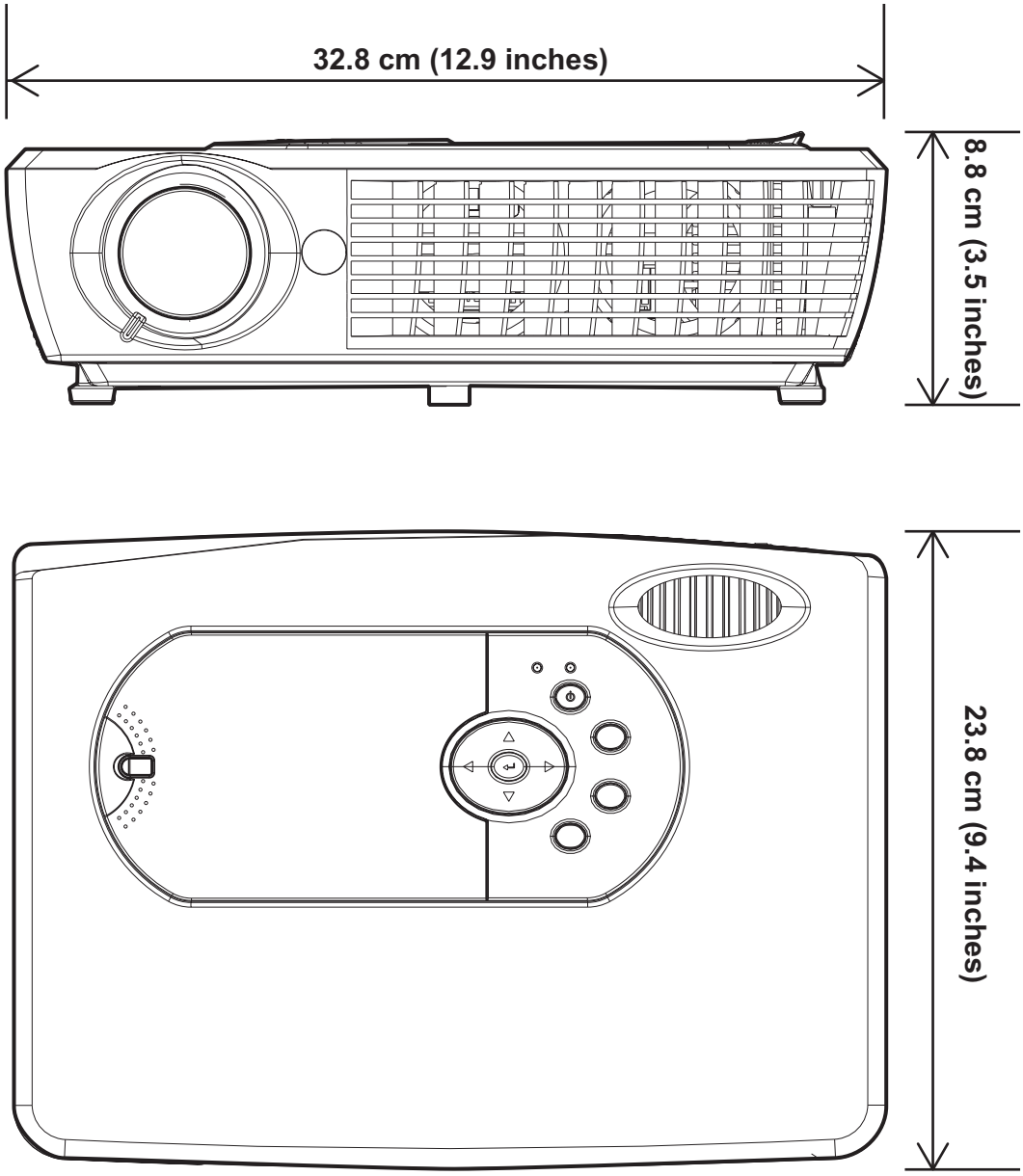

ViewSonic®